PO.078f

Online Power Cables Condition Monitoring using Integrated SMART-SENSING Fibre Optic DAS Technology

Kuljit Singh BSc Hons CE IET kuljit.singh@optasense.com Mob: +44 7825 725 487

Optasense Ltd, Cody Technology Park, Ively Road, Farnborough, GU14 0LX, UK

OptaSense® a QinetiQ company

Abstract

Integrated SMART-SENSING

In today's increasingly competitive environment, network operators must optimise the efficiency of the grid and maximise the lifetime of assets and it is essential to understand the condition of the network at every point. Achieving and delivering power demands requires certainty clear understanding about what is really happening in the asset, because the integrity of the network is only as robust as the weakest point.

Fibre Optic Sensing has been used in power networks for a number of years to detect hotspots and help operators maximise the use of their power cable asset through the use of Distributed Temperature Sensing (DTS). The advent of Distributed Acoustic Sensing (DAS) now allows the operator to detect what is happening within and around the cable.

OptaSense® DAS has been used in the Oil & Gas industry for a number of years. Many of the applications are also relevant to power networks. DAS systems use Coherent OTDR (C-OTDR) technology. The principal of data acquisition is similar to DTS but Rayleigh backscatter is used in order to monitor vibrations and strain along the entire length of the power cable. This technique allows us to use the optical fibre as an array of thousands of sensors which can be used in a wide range of environments along onshore and offshore power cables for the monitoring of Offshore Wind applications.

This poster discusses the application of OptaSense® DAS within the power network to monitor issues such as a major breakthrough online short-circuit detection and localisation, Third Party Interference, tidal and wave height monitoring; transformer, cable and insulator condition monitoring, as well as the potential to detect the early signs of cable failure

Objectives

Market Demands:

- Increasingly competitive environment
- Operators must optimise the efficiency
- Maximise the lifetime of asset

Requires:

- Essential to understand the condition of the network at every point
- Integrity of the network is only as robust as the weakest point

Offshore Wind Farm (OWF) Power Cable Issues

Sources:	Hazards:
• Poor cable joints or partial discharge	• Short circuits damage
• Third Party Intervention	• Digging / Theft
• Mobile sediment	• Cable exposure causing vortex vibration and free span
• Shipping anchors / Fishing vessels	• Snagging of cables

Technique

DAS Principles

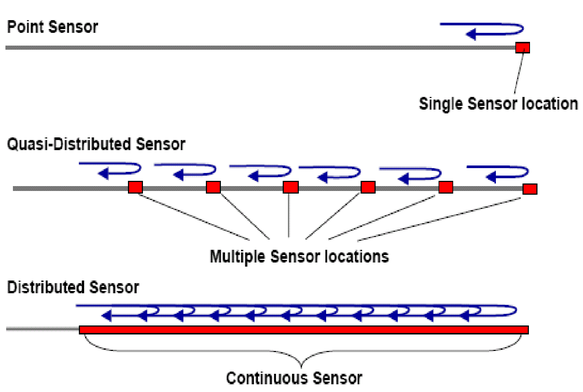

DAS takes Acoustic measurements along the entire optical fiber; there are no discrete sensors.

A single optical fiber can replace hundreds or thousands of point sensors.

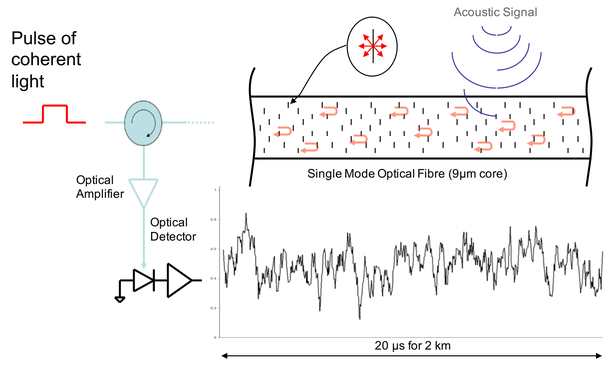

Distributed Sensing leverages the entire length of the fibre, meaning there is full well coverage continuously.

Background of Case Study

- Short circuit on the main export cable from an OWF
- OWF Cable length was 15 km, with 13 km of that cable being sub-sea
- Until the fault could be located, and a repair effected, approximately 80 MW of off shore power was sitting idle
- TDR and DAS methods were used to locate the fault during this time

Results

Time Domain Reflectometry (TDR)

- The fault was about 2 km offshore
- Repair cost in the region of £8M and the wind
- turbines would be offline for up to 6 months

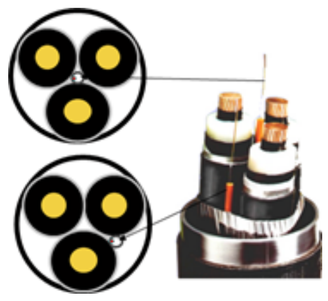

DAS Intervention

✓ The fault was pin pointed(10metres)
✓ On land several hundred meters before the cable reached the sea
✓ Fault location was identified and repairs were completed quickly
✓ Relatively cost-effectively without any costly marine intervention

OWF Power Cable Layout

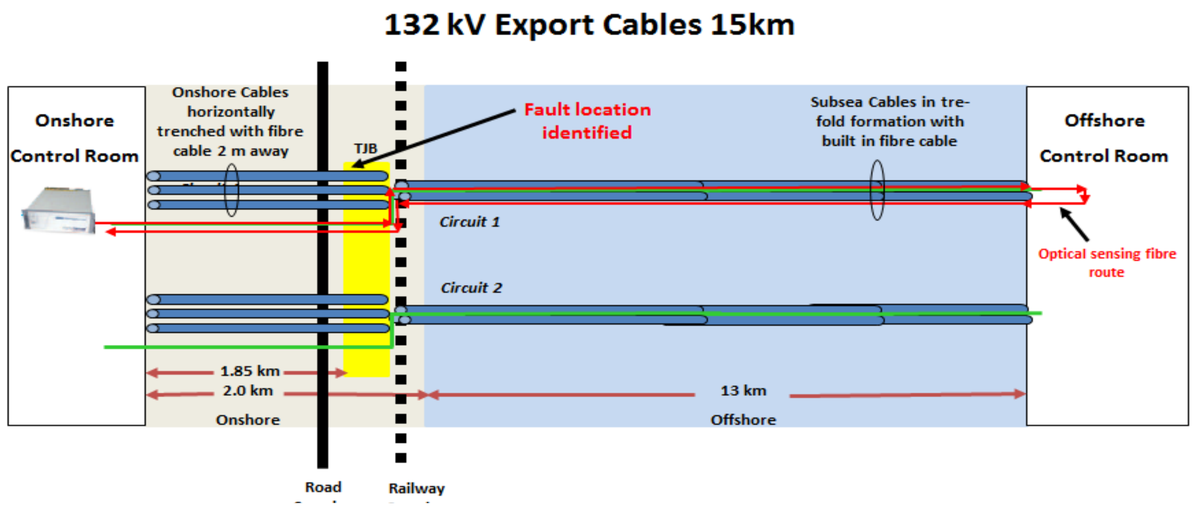

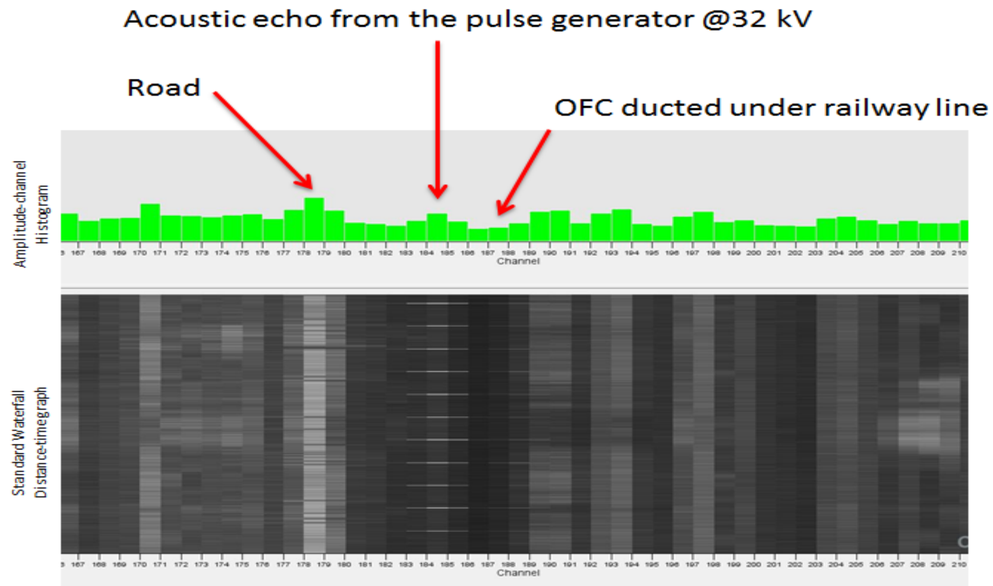

Conclusions

✓ The fault location was confirmed and repairs were carried within a week.

✓ As a result of this quick turnaround as compared to the traditional fault detection technique.

✓ Significant cost savings were made when using the DAS equipment (greater £6M).

✓ Online detection is possible with a permanent DAS install.